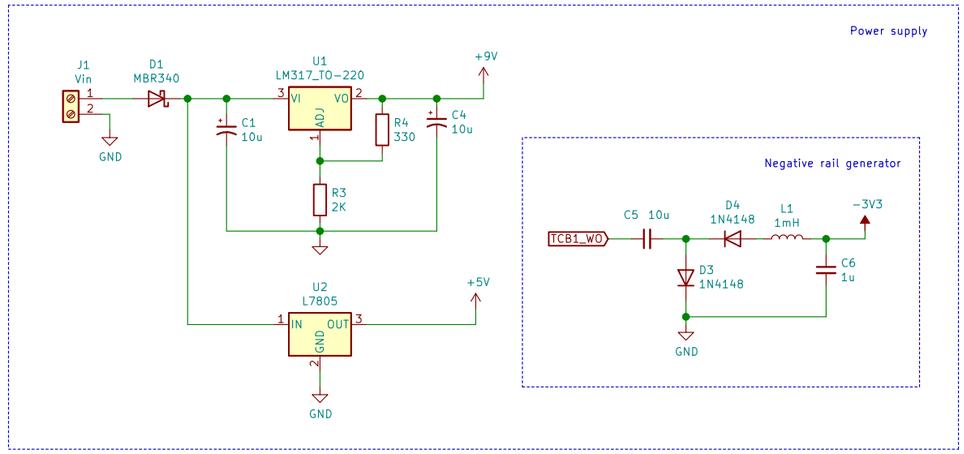

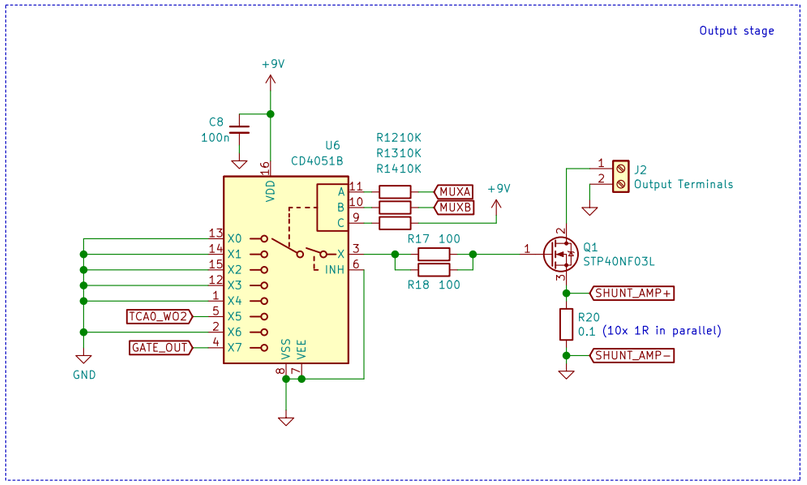

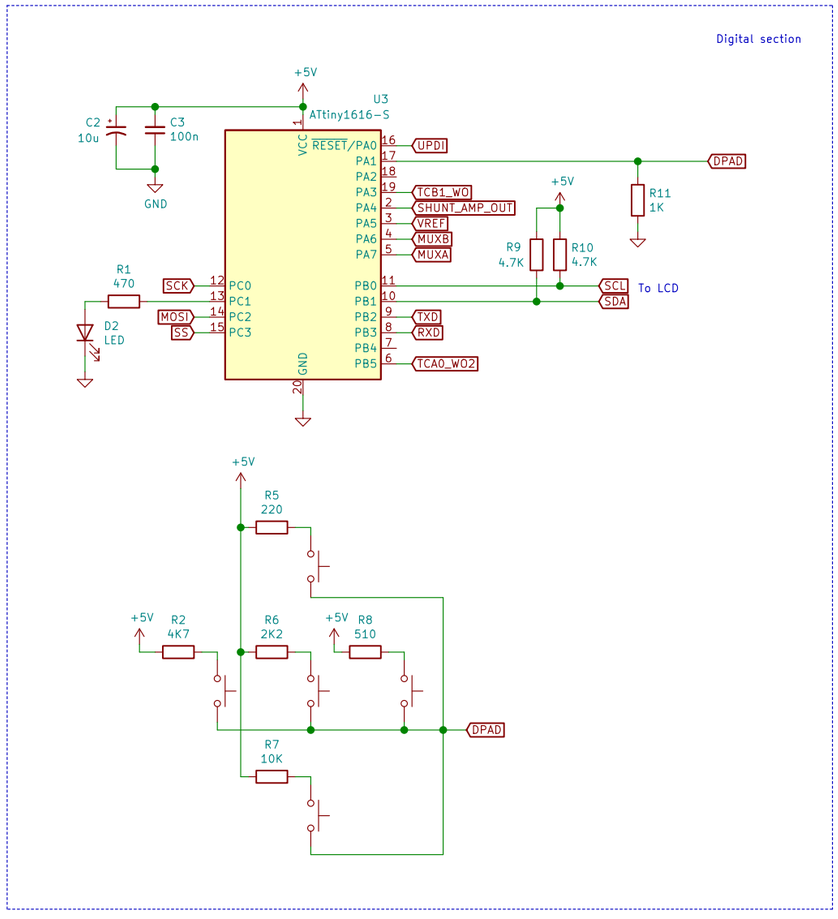

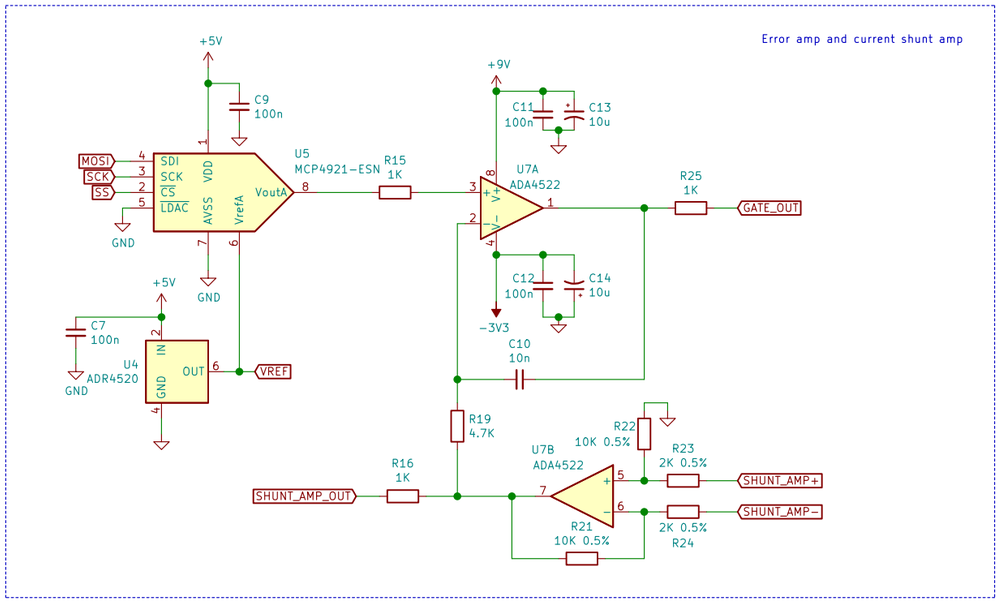

Infinus Electronics

Sheet: /

File: Inductor Sat Current Jig.sch

Title: Inductor I_Sat Measurement Jig and CC Dummy Load

Size: A3	Date: 2021-08-21	**Rev: 0.1**
KiCad E.D.A. eeschema (5.1.8)-1		Id: 1/1